正视图

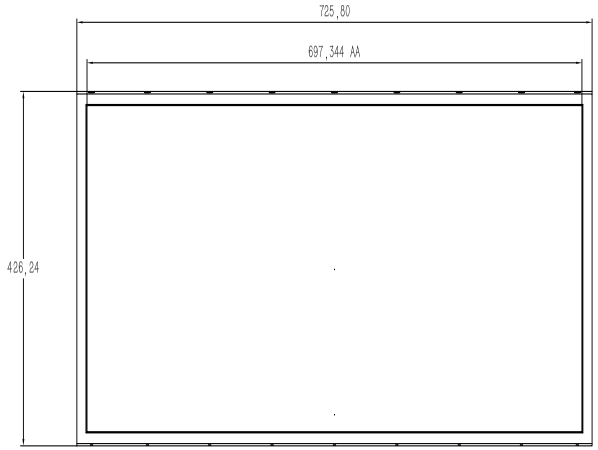

侧视图

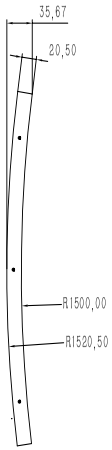

后视图

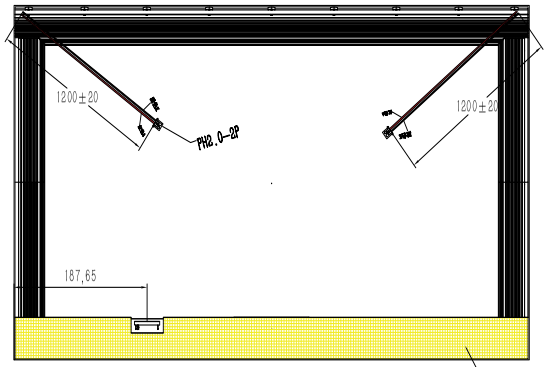

Black Tape

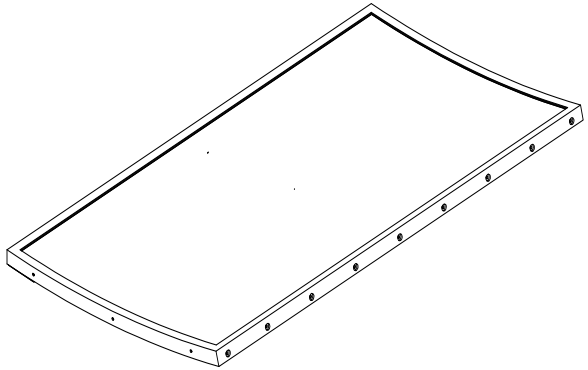

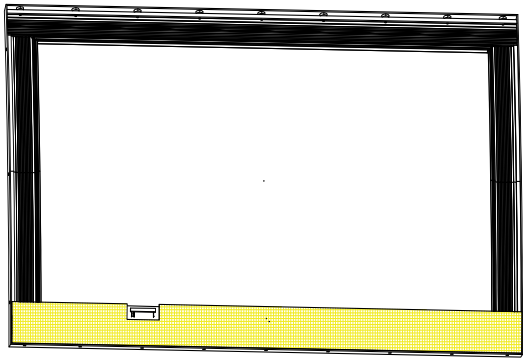

Electronics/Optical Specifications:

ITEM	SYMBOL	MIN.	TYP.	MAX.	UNIT
Forward Voltage	V_f	48	50	52	V
Forward Current	I_f	320	480	720	mA
Power Dissipation	P_d	--	24	--	W
Bringhtness	--	--	500	--	cd/m^2
Uniformity(9 point)	--	--	75	--	%
LED Life Time	H	30000	--	--	Hours

	SYMBOL	RATINGS
Operating Temperature	Topr	0° C to +50° C
	Tsty	-20° C to +60° C

Drawn By : Chen Pingping	Material :		APTUS INTERNATIONAL Co.,LTD
Checked By :	Drawing Date : 2025/3/25	Tolerances : ±0.20	Product : 32-inch curved screen (C-shaped)
Confirm By :	FIRST ANGLE PROJECTION	Version : 1.0	Product No. DBT320DZN51E050A